1. Features

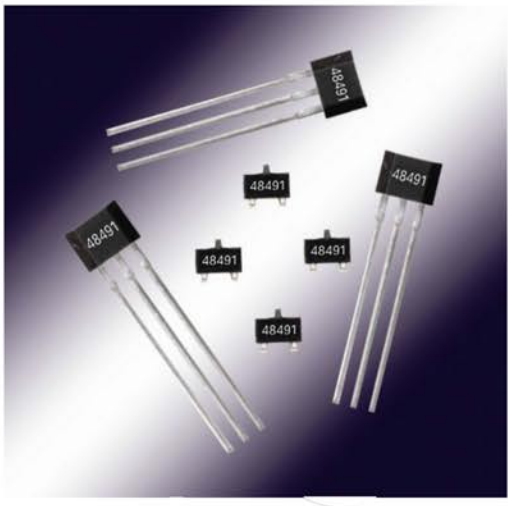

- Micropower consumption for battery powered applications
- Omnipolar, output switches with absolute value of North or South pole from magnet
- Operation down to 2.3V
- High sensitivity for direct reed switch replacement applications
- CMOS output
- ES2481H—no magnet output is high, ES2481L—no magnet output is low

2. Description

The EST2481 Omnipolar Hall effect sensor IC is fabricated from mixed signal CMOS technology .It incorporates advanced chopper-stabilization techniques to provide accurate and stable magnetic switch points.

The circuit design provides an internally controlled clocking mechanism to cycle power to the Hall element and analog signal processing circuits. This serves to place the high current-consuming portions of the circuit into a "Sleep" mode. Periodically the device is "Awakened" by this internal logic and the magnetic flux from the Hall element is evaluated against the predefined thresholds. If the flux density is above or below the Bop/Brp thresholds then the output transistor is driven to change states accordingly. While in the "Sleep" cycle the output transistor is latched in its previous state. The design has been optimized for service in applications requiring extended operating lifetime in battery powered systems.

The output transistor of the EST2481 will be latched on (Bop) in the presence of a sufficiently strong South or North magnetic field facing the marked side of the package. The output will be latched off (Brp) in the absence of a magnetic field.

3. Applications

- Solid state switch
- Handheld Wireless Handset Awake Switch
- Lid close sensor for battery powered devices
- Electric toy

4. Typical Application Circuit

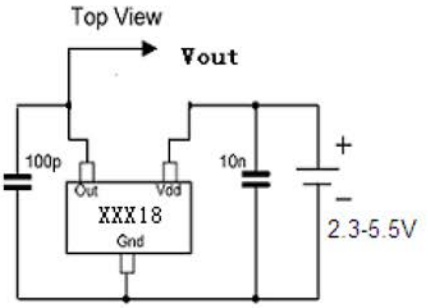

Innosen's pole-independent sensing technique allows for operation with either a north pole or south pole magnet orientation, enhancing the manufacturability of the device. The state-of-the-art technology provides the same output polarity for either pole face.

It is strongly recommended that an external bypass capacitor be connected (in close proximity to the Hall sensor) between the supply and ground of the device to reduce both external noise and noise generated by the chopper-stabilization technique. This is especially true due to the relatively high impedance of battery supplies.

5. Functional Block Diagram

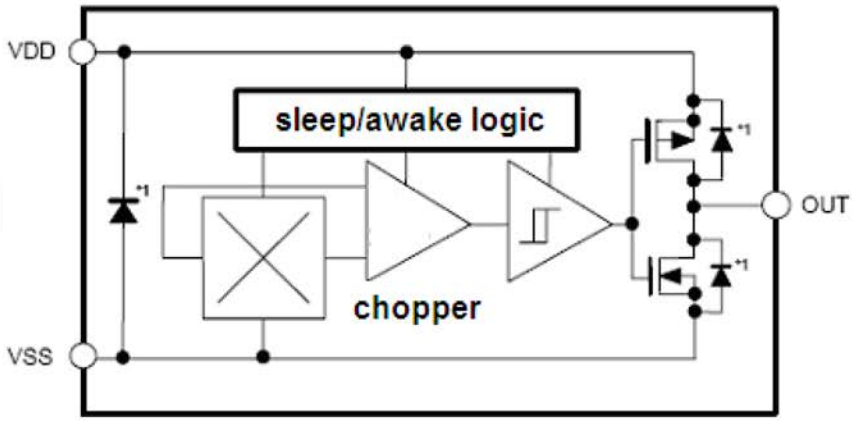

*1. Parasitic diode

6. Pinning

Mark View

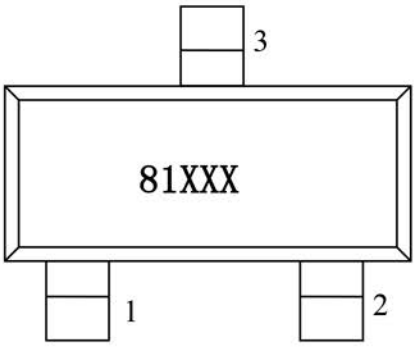

Pin Description

NAME	NO	STATUS	DESCRIPTION
Vdd	1	P	Power Supply
Out	2	O	output
Gnd	3	P	IC Ground

7. Internal Timing Circuit

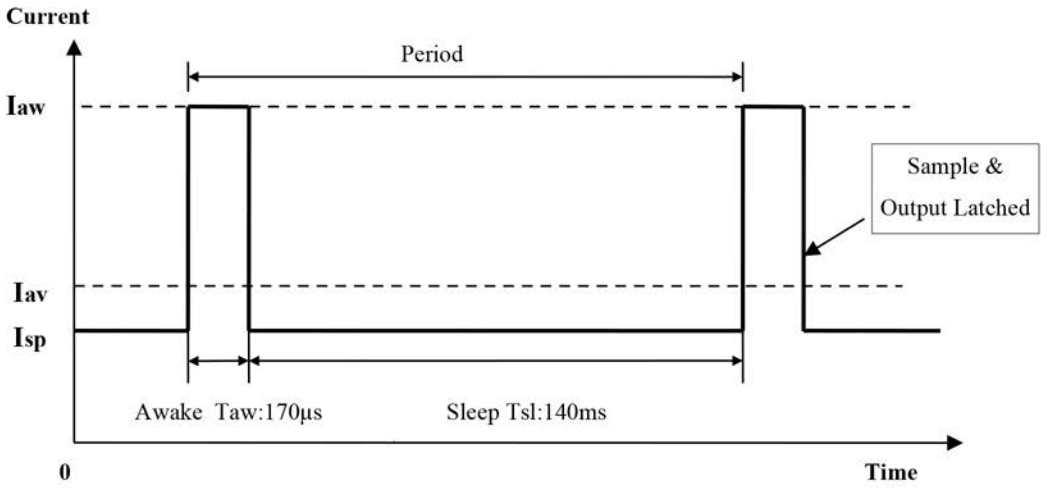

8. Absolute Maximum Ratings

Parameter	Symbol	Value	Units
Supply Voltage(operating)	V_{DD}	6.5	V
Supply Current	I_{DD}	5	mA
Output Voltage	V_{OUT}	6.5	V
Output Curent	I_{OUT}	5	mA
Operating Temperature Range	T_A	-40 to 85	℃
Storage Temperature Rang	T_S	-50 to 150	℃
ESD Sensitivity	-	4000	V

Exceeding the absolute maximum ratings may cause permanent damage. Exposure to absolute-maximum rated conditions for extended periods may affect device reliability.

9. DC Electrical Characteristics

DC Operating Parameters: T_A = 25℃, V_{DD}=3V.

Parameter	Symbol	Test Conditions	Min	Typ	Max	Units
Operating voltage	V_{DD}	Operating	2.3	3	5.5	V
Supply current	I_{DD}	Average		3.5		μA
Output Current	I_{OUT}				1.0	mA
Saturation Voltage	V_{SAT}	I_{OUT}=1mA			0.4	V
Awake mode time	T_{AW}	Operating		170		μS
Sleep mode time	T_{SL}	Operating			140	mS

10. Magnetic Characteristics

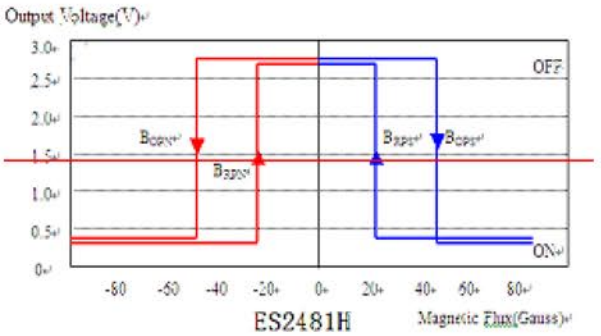

ES2481H

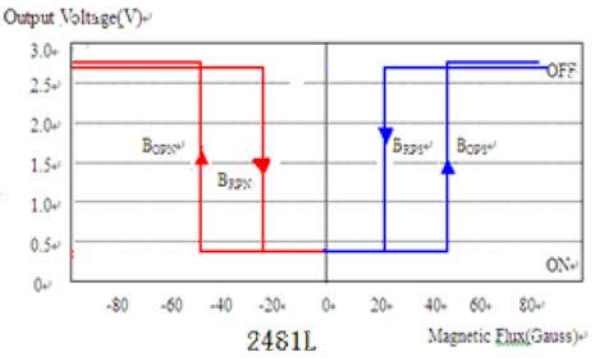

2481L

Operating Parameters: T_A = 25℃, V_{DD}=2. 75V_{DC}.

PARAMETER	Symbol	Min	Type	Max	Units
Operating Point	Bop	-	+/-35	+/-60	Gs
Release Point	Brp	+/-5	+/-27	-	Gs
Hysteresis	Bhys	-	12	-	Gs

11. ESD Protection

Human Body Model (HBM) tests according to: Mil. Std. 883F method 3015.7

Parameter	Symbol	Limit Values		Unit	Notes
		Min	Max		
ESD Voltage	V_{ESD}		±4	kV	

12. Unique Features

CMOS Hall IC Technology

The chopper stabilized amplifier uses switched capacitor techniques to eliminate the amplifier offset voltage, which, in bipolar devices, is a major source of temperature sensitive drift. CMOS makes this advanced technique possible. The CMOS chip is also much smaller than a bipolar chip, allowing very sophisticated circuitry to be placed in less space. The small chip size also contributes to lower physical stress and less power consumption.

Installation Comments

Consider temperature coefficients of Hall IC and magnetics, as well as air gap and life time variations. Observe temperature limits during wave soldering. Typical IR solder-reflow profile:

- No Rapid Heating and Cooling.
- Recommended Preheating for max. 2minutes at 150℃
- Recommended Reflowing for max. 5seconds at 240℃

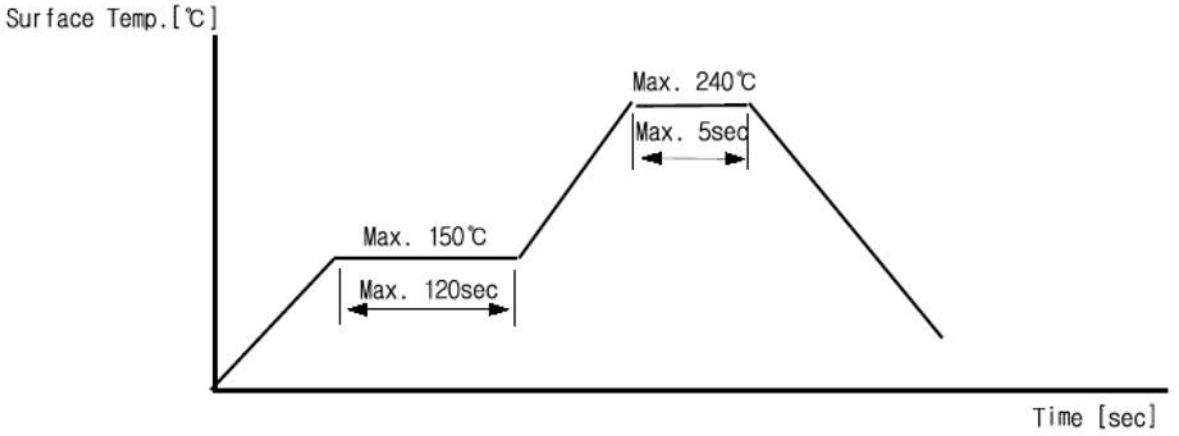

13. ESD Precautions

Electronic semiconductor products are sensitive to Electro Static Discharge (ESD). Always observe Electro Static Discharge control procedures whenever handling semiconductor products.

14. *Package Information*

14.1 *TSOT-23 Package Physical Characteristics*

Top

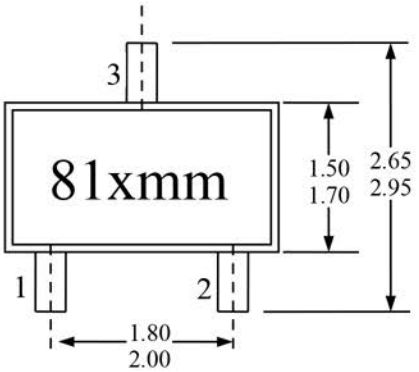

Notes:
1). PINOUT: Pin 1 VDD
Pin 2 Output
Pin 3 GND
2). All dimensions are in millimeters ;

Marking:
81 -- Code of Device (ES2481);
x -- L:2481L,H:2481H;
mm -- Production Lot ;

Side

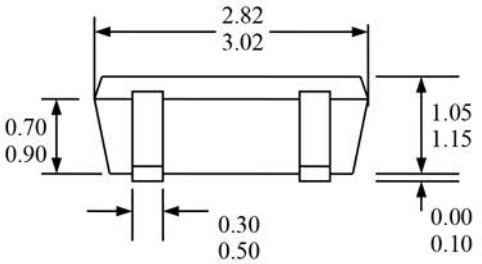

End View

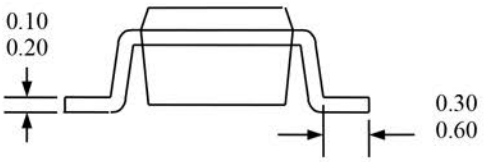

Hall plate location

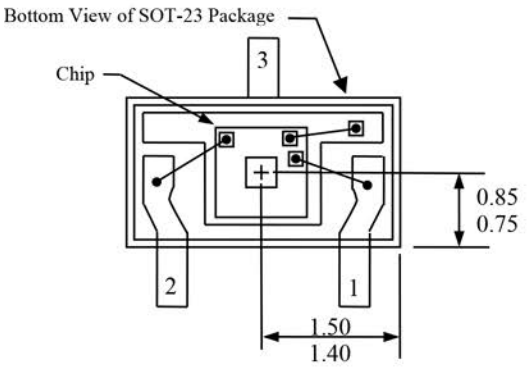

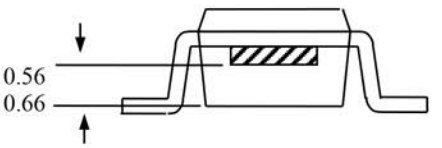

14.2 TO-92 Package Physical Characteristics

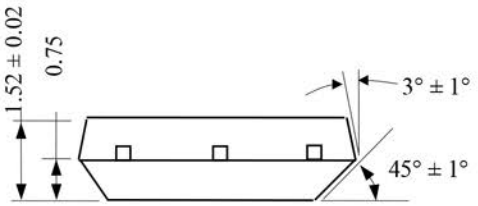

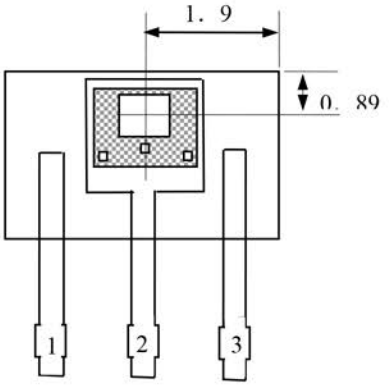

Sensor

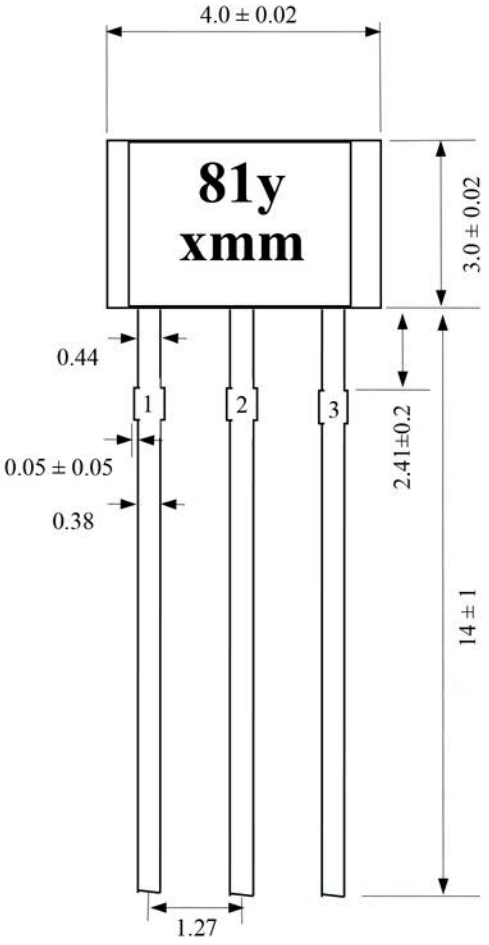

Active Area 0.84(Nom)

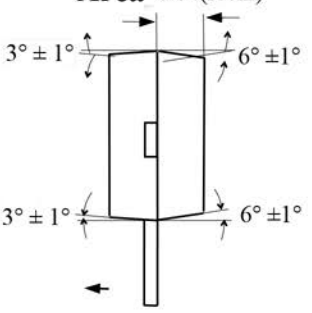

Notes:

1). Controlling dimension : mm ;

2). Leads must be free of flash and plating voids ;

3). Do not bend leads within 1 mm of lead to package interface ;

4). PINOUT: Pin 1 VDD
Pin 2 GND
Pin 3 Output

Marking:

81 -- Code of Device (ES2481) ;

y -- last 1 digit of year ;

x—L:2481L,H:2481H;

mm -- Production Lot ;